# How Do Electrical Circuits Work?

## Lesson 11, Part 2: Domestic Electricity

### Household Wiring

This diagram shows how the ..... and ..... wires provide **current** through the heating **element** of the toaster.

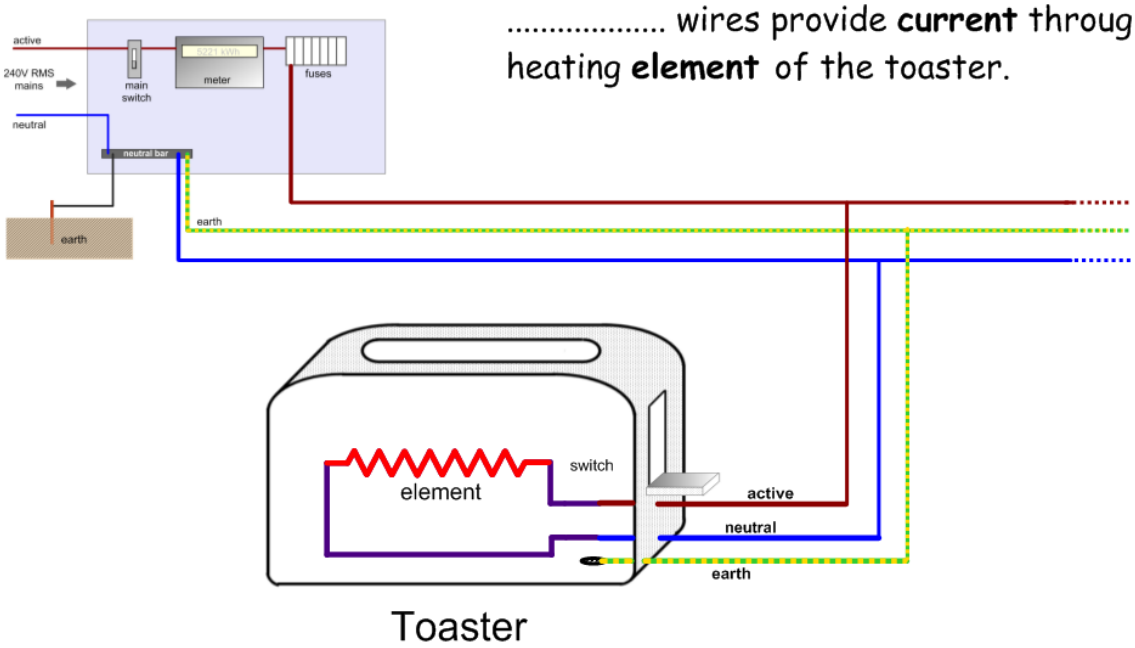


Describe the reason for the **earth** wire. .....

.....

.....

Extra Notes

# Household Wiring (Continued)

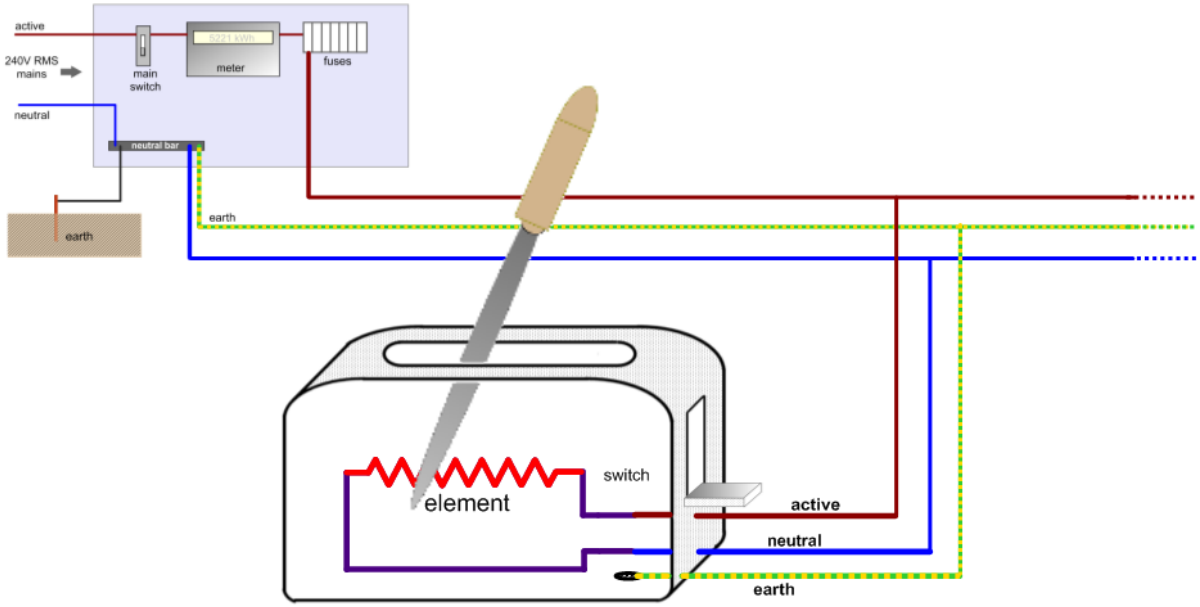


In your own words, describe what could happen if a person foolishly tried to dislodge a piece of toast with a metal knife as shown above.

# Safety Features

## Earthing

If a broken ..... **wire** comes into contact with the ..... wire or **earth**, a **short circuit** is created.

This causes a **large** ..... to pass through the **fuse** which **melts** it, ..... the circuit.

If there was no fuse, the short circuit heat up wires **elsewhere** in the house causing a .....

The **earth-fuse system** does **not** protect .....as the reaction ..... is too long.

## Electric Shock

Possible effect of .....-..... electric shock.

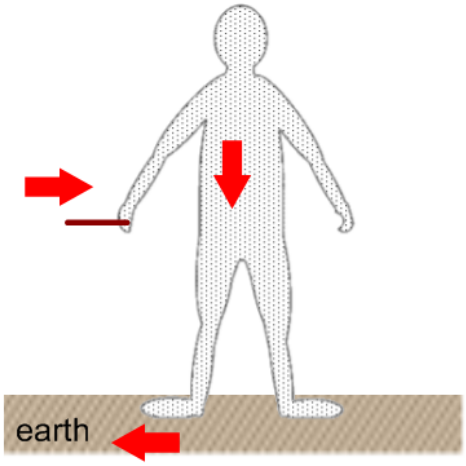


| Current (mA) | Effect on the body |
|---|---|
| 1 | Able to be felt |
| 3 | Easily felt |
| 10 | ..... |
| 20 | Muscles paralysed—cannot let go |
| 50 | ..... |
| 90 | Breathing upset |
| 150 | ..... |
| 200 | Death likely |
| 500 | Serious burning, breathing stops, death inevitable |

The actual current flowing will depend on **skin** ..... and applied ..... level.

## Electric Shock (Continued)

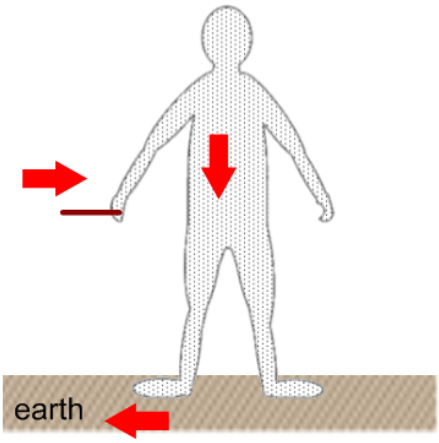


Possible effect of a .....**mA** shock for various amounts of.....

| Time of 50 mA current | Likely effect |
|---|---|
| Less than 0.2 s | ..... |
| 0.2–4 s | Significant shock, possibly dangerous |
| Over 4 s | ..... |

## Preventing Electric Shock

Avoid using electrical appliances when ....., particularly if the ground or floor is wet as this allows more ..... to pass through the body to .....

Take care when using an electrical appliance near..... Never use a hair dryer while wet or near a bath.

If you notice even a small shock, have the appliance checked by a qualified person.

Do not tamper with electrical equipment and make sure that cords and plugs are in good shape.

## In the event of a shock

Make sure the victim is still not connected to the sources of the shock. Otherwise, if you contact the victim, you may become a victim too. Your ..... may contract and you will not be able to let go of the victim.

Turn off the electricity or knock the victim away from the sources of electricity with non ..... object such as a wooden chair.

..... failure is a common cause of death for victims of shock. If breathing has stopped, artificial respiration should be given.

Call an ambulance straight away.

# Safety Features (Continued)

## Earth Leakage Circuit Breakers (ELCBs)

Sometimes called **R**..... **C**..... **D**..... (RCDs).

In the event of a fault, they **cut off** the current within ..... seconds or **20 milliseconds** and so they protect ..... as well as property.

**No Fault Situation**

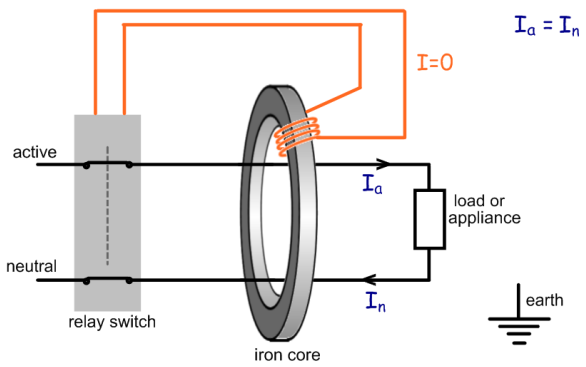


**Fault Situation**

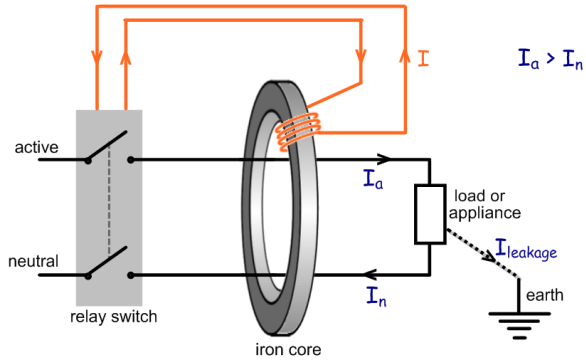


Using the diagrams above showing Fault and No-Fault situations, describe how an **Earth Leakage Circuit Breaker** acts to protect both **people** and **property**.

# Safety Features (Continued)

## Double Insulation

Many newer appliances are built so that there are at least .....insulating barriers between any ..... parts and the user.

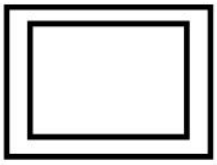

Symbol for double insulated appliance

A double insulated appliance has a ..... case so that if the ..... wire became loose, it could not make the case active.

Double insulated appliances use .....-pin plugs because the earth wire is no longer required for safety.

Two-pin plug

## The Power Grid

Most households in Victoria are connected to the **power grid** via **transmission lines**.

**Baseload** electricity is generated by **coal or gas fired power stations** located in the La Trobe Valley.

Use of alternative sources of electricity such as **hydro-electricity**, **wind turbines** and **solar panels** is increasing.

## Sources of Household Electricity

**Coal or gas fired power stations**, **wind turbines** and **hydro-electricity plants** all produce electricity by spinning **turbines**.

They produce ..... electricity.

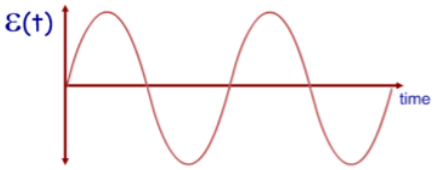

# Summary (Continued)

## The kilowatt hour (kWh)

Companies which deliver electricity charge their customers according to the amount of **electrical energy** delivered.

Power companies use the ..... ..... (kWh) as a unit for electrical energy.

**1 kilowatt hour** is the amount of energy delivered by a power source operating at **1 kiloWatt** for **1 hour**.

$W = E = Pt$

1 kWh = 3.6 MJ = ..... J

## Household Power Circuit

### Fuses

**Fuse wire** is designed to ..... and cause an open **circuit** if an over-large current passes through it.

circuit symbol

Fuse wire is **rated** according to the .....that it can pass without melting.

**15 Amp** is typical for household power points.

**Household Power Circuit**

**Meter Box**

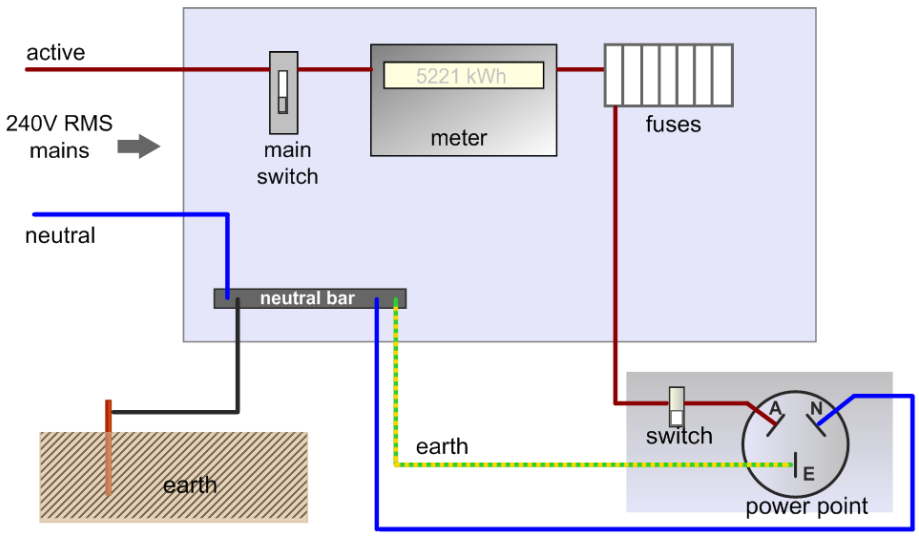

# Summary (Continued)

## Household Wiring

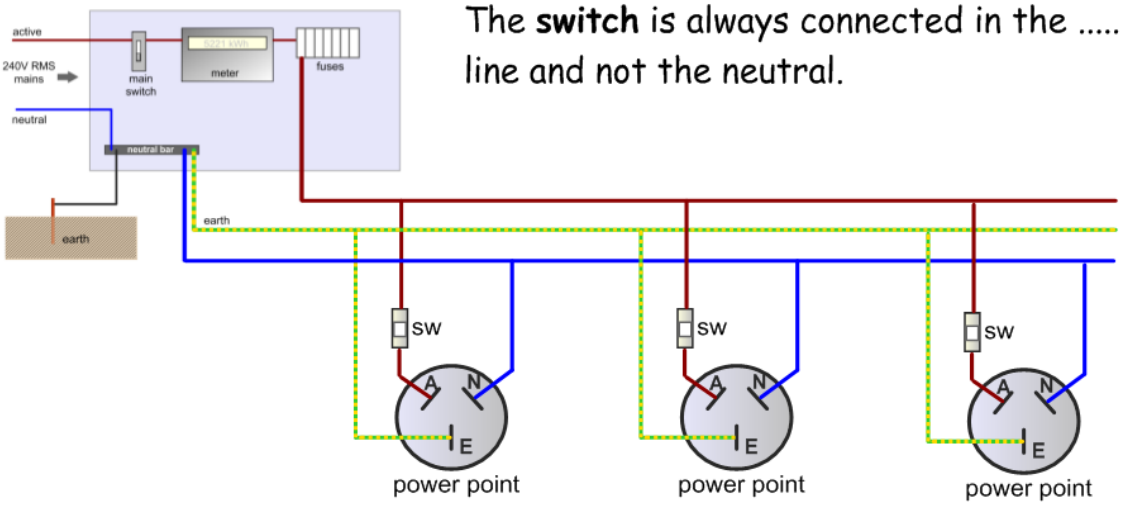


The **switch** is always connected in the ..... line and not the neutral.

Power points are connected in ..... because most **mains operated** household devices are designed for the **same** ....., **240 Volts RMS**.

## Earth Leakage Circuit Breakers (ELCBs)

Sometimes called **Residual C**..... **Detectors** (RCDs).

In the event of a fault, they **cut off** the current within 0.02 seconds or ..... **milliseconds** and so they protect ..... as well as property.

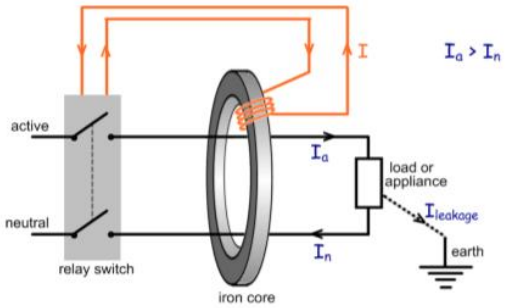


## Double Insulation

There are at least two insulating barriers between any ..... parts and the user.

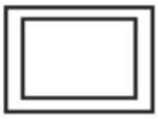

**Symbol for double insulated appliance**

A double insulated appliance has a plastic case so that if the active wire became loose, it could not make the ..... active.

Double insulated appliances use two-pin plugs because the ..... wire is no longer required for safety.

Two-pin plug